Multiplexing

- It is unlikely that two communicating devices will *utilise* fully the capacity of a transmission link.
  - For example Fibre Optic cables have very high BW and hence can carry a lot of data; more data than would be required for most host-to-host interactions.
- This <u>spare</u> capacity can be used by other communicating devices.
- The sharing of a data communications facility in this way is called *multiplexing.*

Basic Multiplexing Components

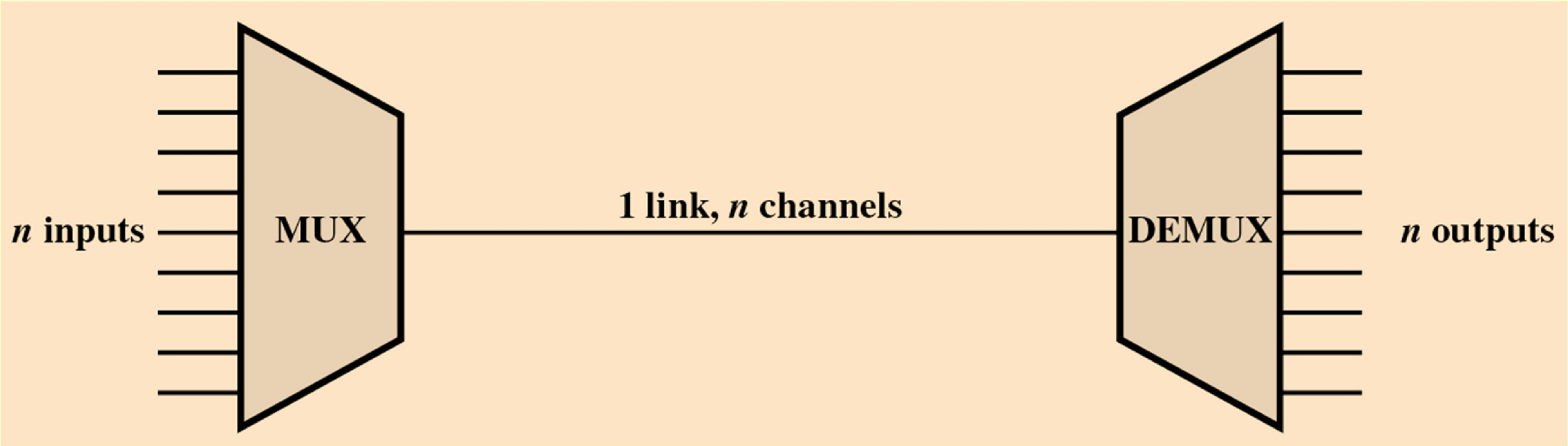

Motivations for using Multiplexing

- Multiplexing is commonly used in communications because:
  - Communications equipment is expensive. Hence, the higher the data rate of a transmission system the lower the cost per *Kbps.*
  - Many communicating devices use relatively modest data rates and so can be mixed together on a higher speed system.

Multiplexing Examples

- Cable networks:
  - Many communication services are provided on Cable networks such as TV, Broadband, IP Telephony, Radio etc. Each of these services are multiplexed onto the subscriber connection.
- Telecommunications networks
  - Fibre optical, coaxial cable, and microwave links are used between exchanges and towns/cities,
  - Each communications link simultaneously carries many voice and data transmissions between multiple end devices/users.

Types of Multiplexing

- There are two common Multiplexing techniques employed:
  - Frequency-division multiplexing (FDM) is an *Analogue Transmission* technique which produces an analogue signal from multiplexed *analogue* and/or *digital* signals <u>without</u> regard to the data,
  - Time-division Multiplexing (TDM) is a *Digital Transmission* technique which produces a digital signal from multiplexed *analogue* and/or *digital* signals <u>with</u> regard to the data.

Frequency Division Multiplexing

- Used when the useful BW of a transmission link exceeds the BW of individual signals.
- Each signal is modulated onto a different *carrier frequency* (known as a *subcarrier*).
- The *carrier frequencies* are combined to produce a <u>composite</u> analogue signal (known as a *baseband signal*).
- The *baseband signal* is analogue and is transmitted across a single transmission link.

Frequency Division Multiplexing

- The input **data** may be *analogue* or *digital.*
- The BW of the composite signal must be *greater* than the sum of BWs of the individual input signals.
- A *guard band* must be inserted between the carrier frequencies to prevent *overlap.*

FDM – Transmitter

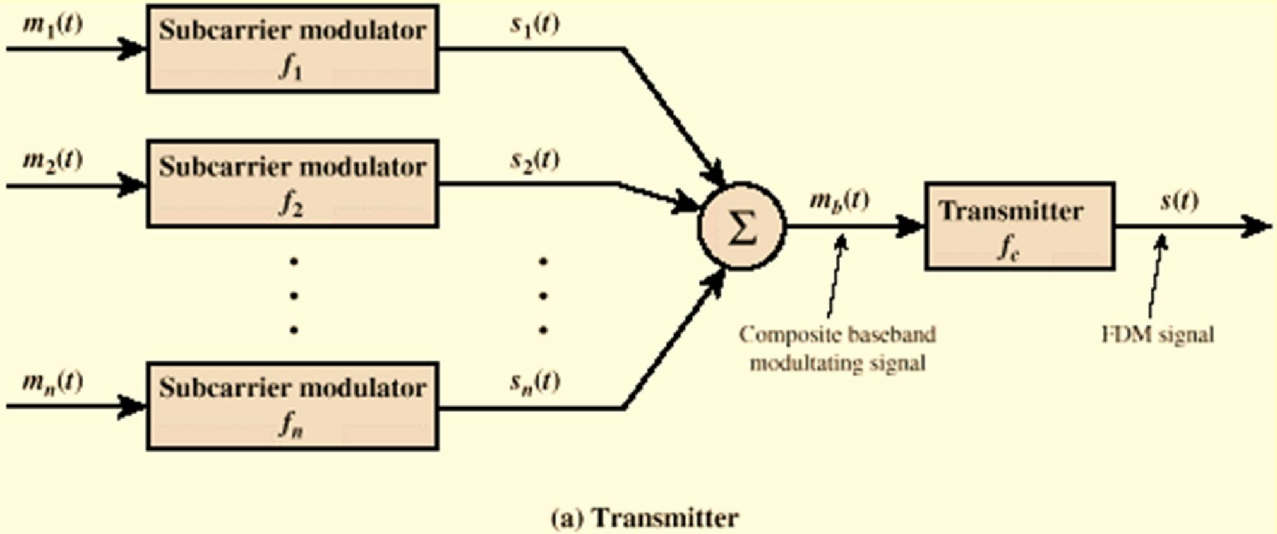

(a) Transmitter

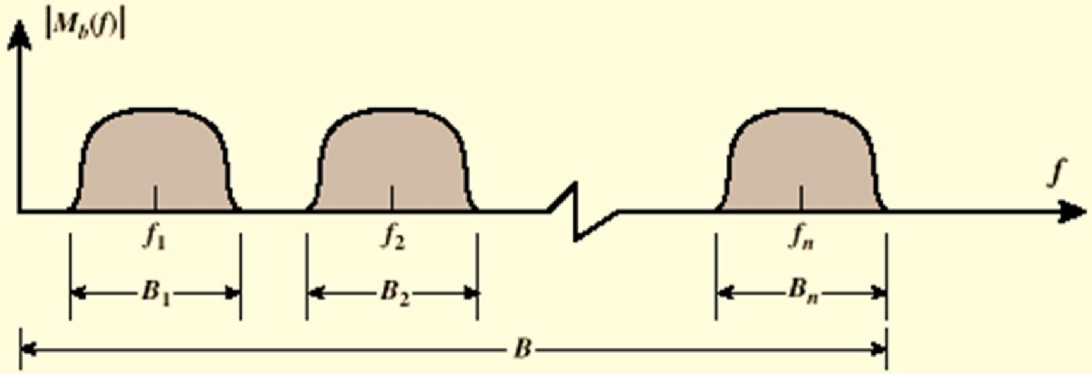

(b) Spectrum of composite baseband modulating signal

FDM – Receiver

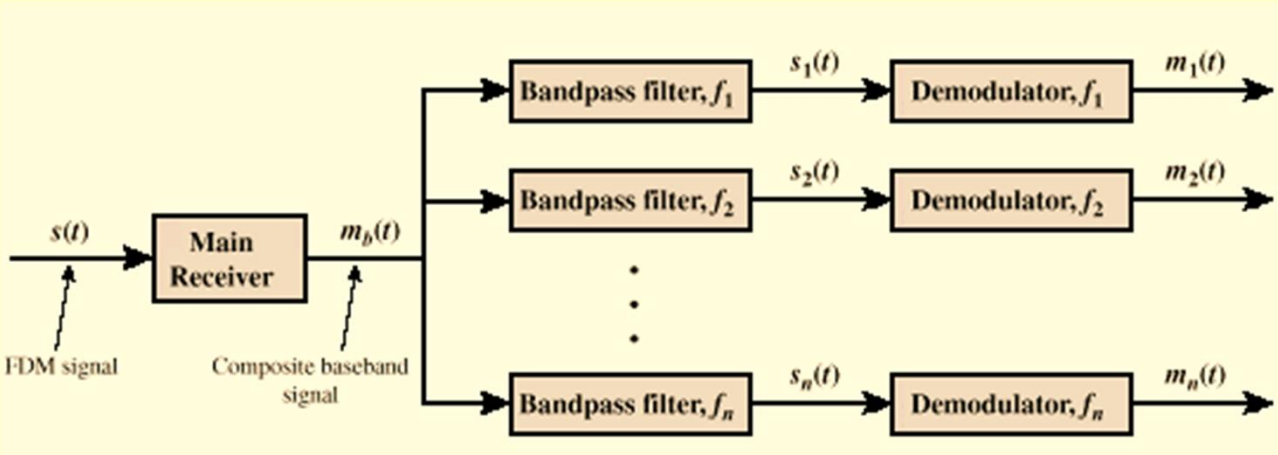

(c) Receiver

FDM Example – ISP services to Home

Questions: A and X are inputs to the Router and Set-top Box respectively.

- Which of the following internal devices produce outputs: A/B, A/C and X/Y?
- What is the internal receiver device at Z?

I/P: Demodu-lator	O/P: Coder

I/P: Demodu-lator	O/P: Coder

I/P: Demodu-lator	O/P: Modulator

- ADD COMPUTER CONNECTION TO ROUTER TO DIAGRAM

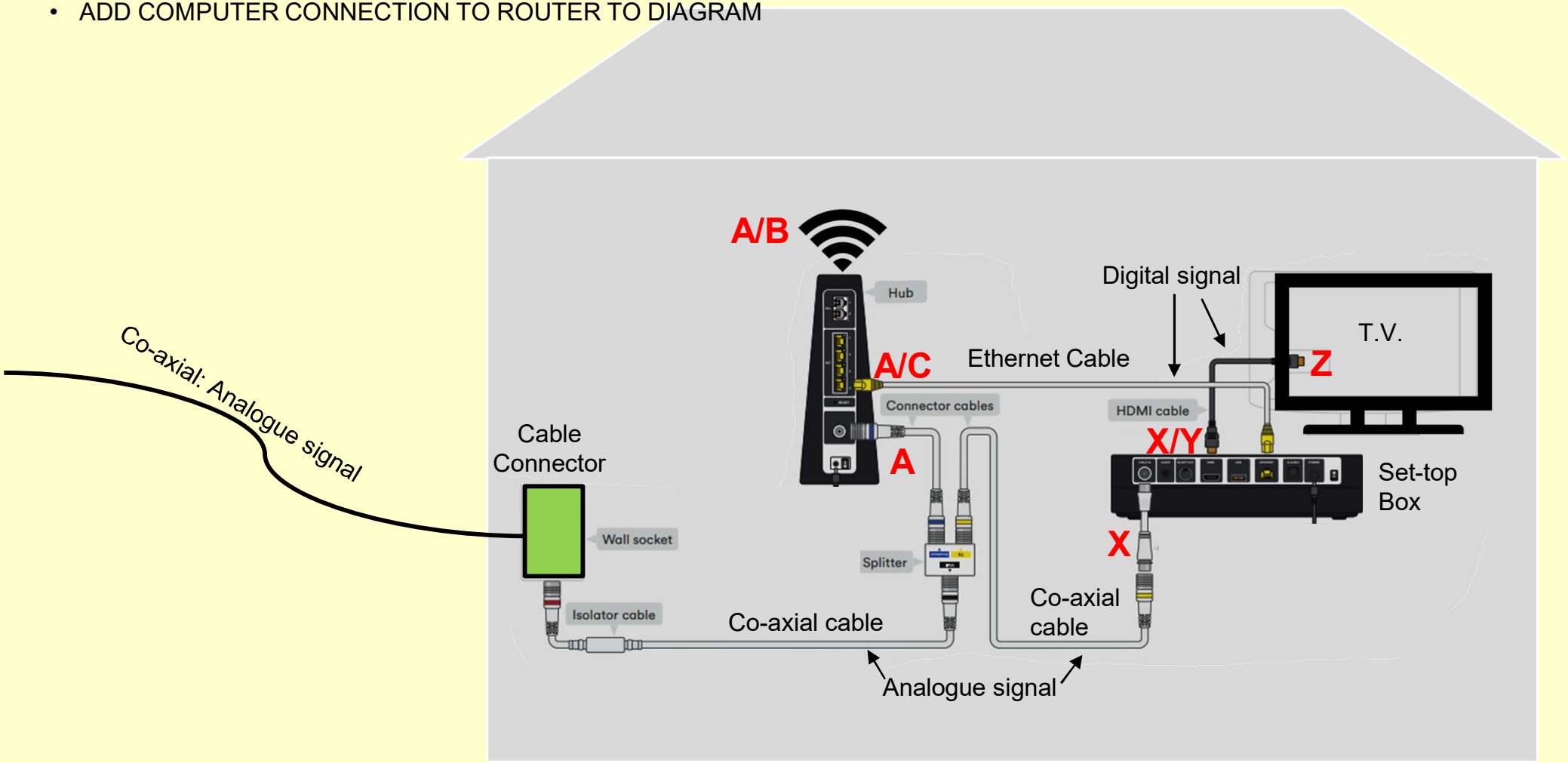

Synchronous Time-Division Multiplexing

- This is the digital equivalent of FDM.
- Here portions of each input signal are *interleaved* in <u>time</u> (as opposed to frequency) onto the transmission medium.
- Incoming data carrying signals can be either *analogue* (with encoded digital data) or *digital.*
- The interleaving can be at *bit* level or in *blocks* of bytes:
  - This determines the size of the input *buffers*

TDM – Transmitter

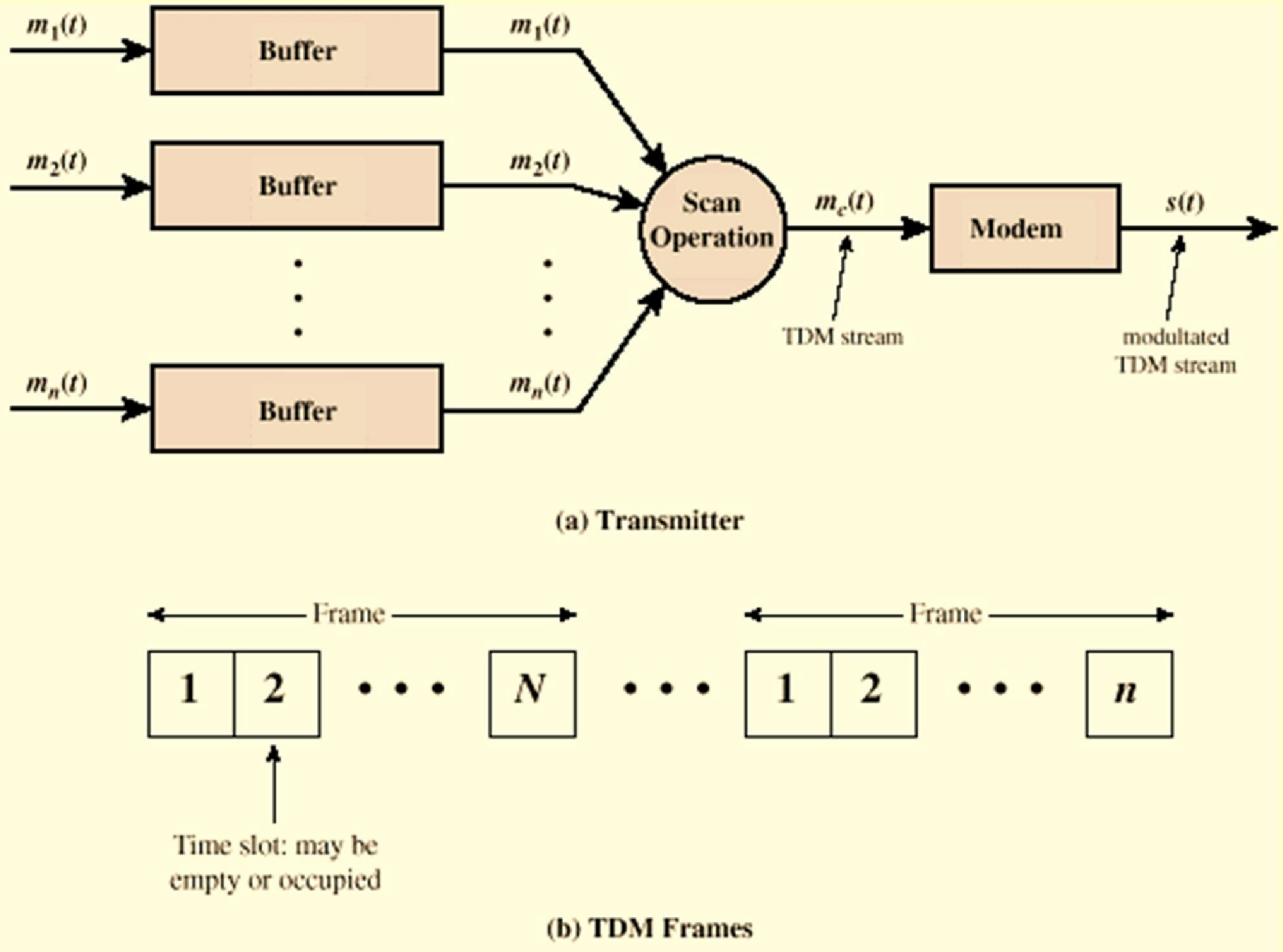

TDM – Receiver

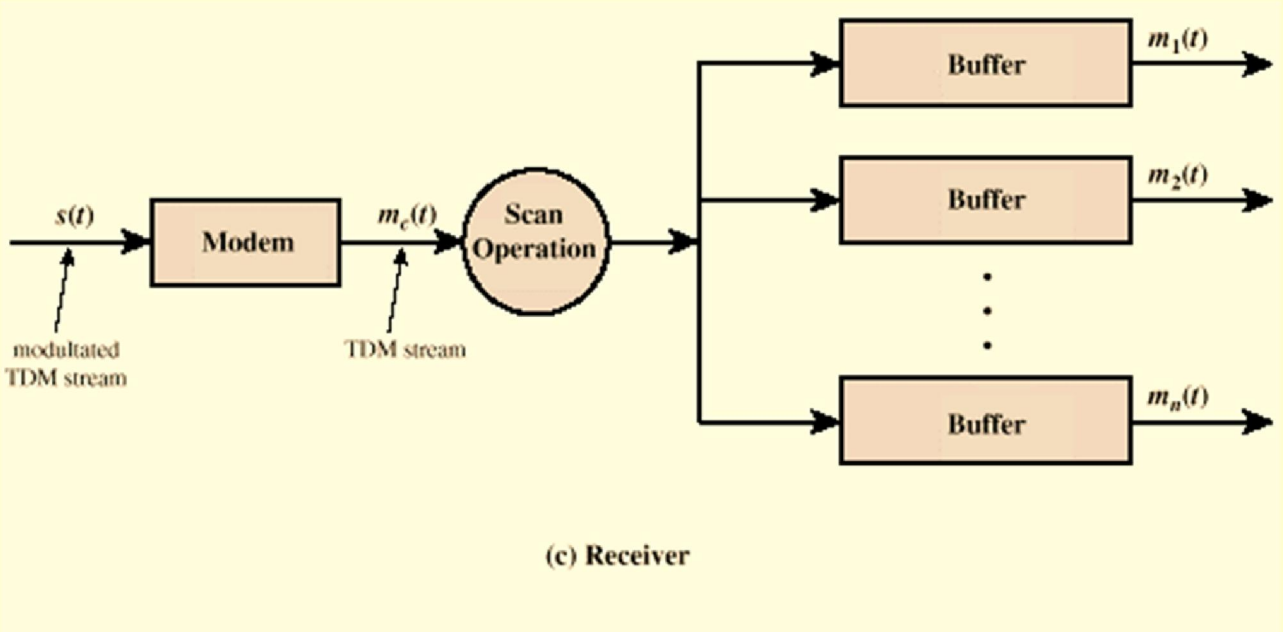

(c) Receiver

Synchronous Time-Division Multiplexing

- Data are organised into *frames.*
- Frames contain a cycle of *time slots.*
- One or more *time slots* within a *frame* is dedicated to <u>one</u> pair of data source devices.
- The combination of *time slots* across successive frames is called a *channel:*
  - Each pair of data source devices is allocated a *channel* for their communication requirements.

Synchronous Time-Division Multiplexing

- The system is *synchronous* because:
  - Time slots are <u>pre-assigned</u> to source devices,
  - They are transmitted regardless of whether the source devices are sending data.
- *Frame synchronization* is required:
  - Achieved using a separate *channel,*
  - Known as *Added-digit Framing.*
- TDM is used as part of the public long-haul telecommunications system.